Fig. 70: Premium Sound Radio Circuit, W/O DVD W/O Satellite Radio

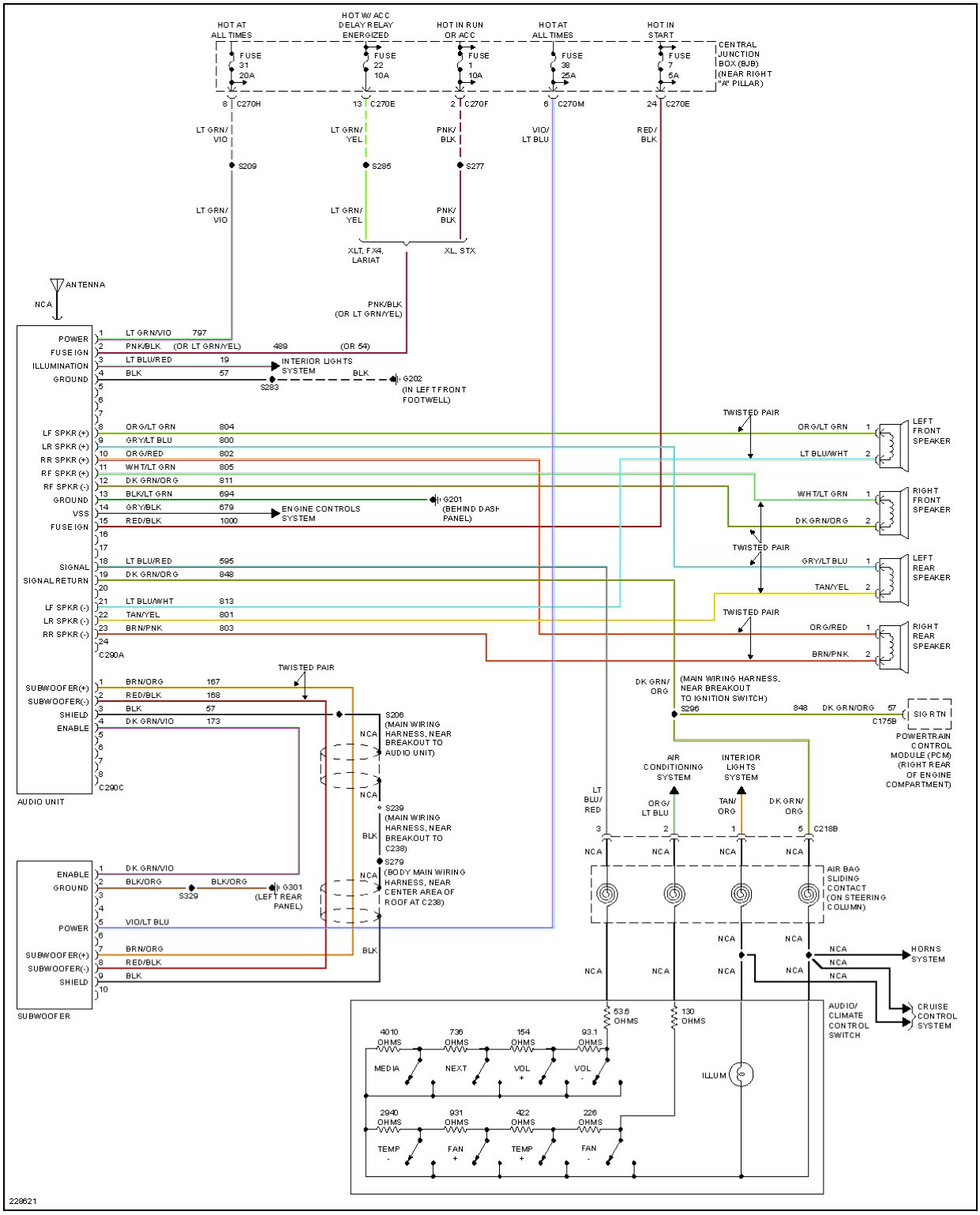

© 2005 Mitchell Repair Information Company, LLC.